POST AND COLUMN SECTION (TYPICAL)

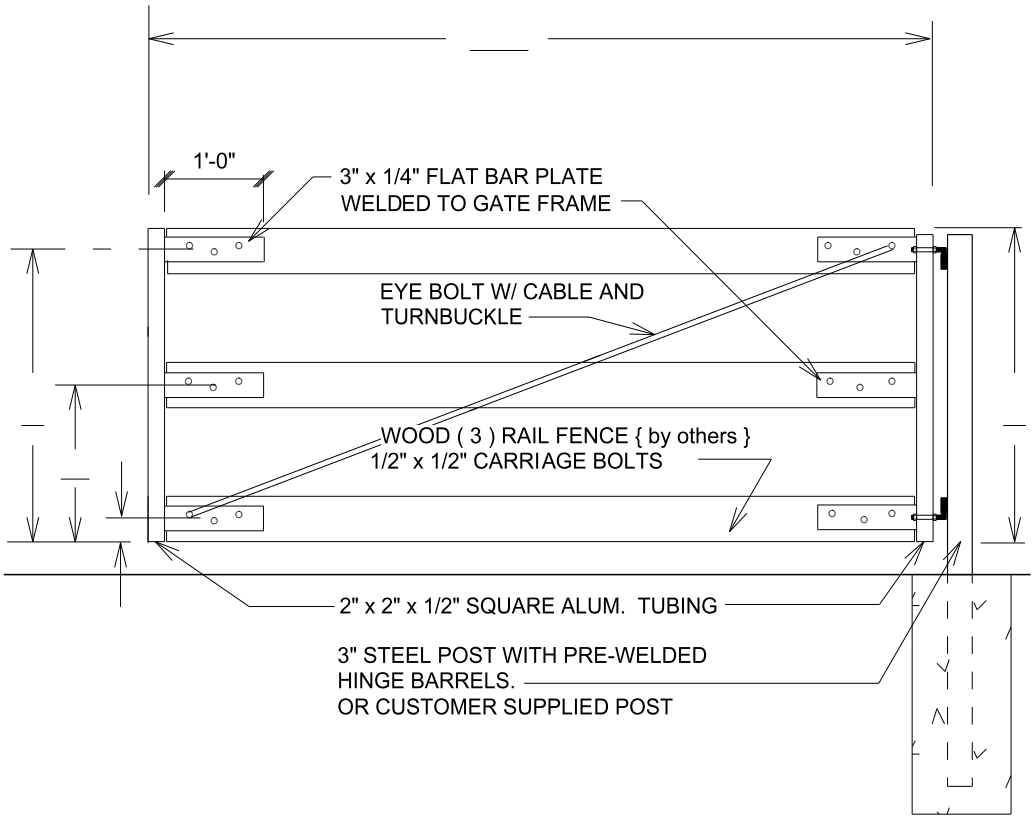

NOTE: THESE DRAWINGS ARE FOR REFERENCE ONLY, PLEASE CHECK LOCAL BUILDING CODES. CODE COMPLIANCE AND PROPER ENGINEERING ARE THE RESPONSIBILITY OF THE HOMEOWNER, OR INSTALLING CONTRACTOR.
BERLIN ARCHITECTURAL DRAFTING INC., AND GATECRAFTERS.COM ACCEPTS NO LIABILITY OR RESPONSIBILITY FOR IMPROPER INSTALLATION OR CONSTRUCTION.

3'-6" HIGH 3 RAIL GATE KIT (8'-0" OR LESS WIDE)

BERLIN DRAFTING INCORPORATED
15619 PREMIERE DR. SUITE 103 TAMPA, FL. 33624
sales@berlindrafting.net (813) 968-8038

GATECRAFTERS.COM
13100 STATE RD. 54
ODESSA, FL 33556

www.gatecrafters.com
sales@gatecrafters.com
1-800-537-GATE
FAX TO 813-926-8460